OPERATOR'S INSTRUCTION MANUAL

INTELLISCAN EIGHTEEN ZONE

Multi-Zone Walk-Through Security Metal Detector

Ranger Security Detectors, Inc.
11900 Montana Avenue
El Paso, TX 79936

Telephone: (915) 590-4441
Fax: (915) 592-1043
Web site: www.rangersecurity.com
E-mail: www.support@rangersecurity.com

Version 9.9

CONTENTS

Intelliscan Eighteen-Zone Specification	Section 1.0
Parts List and Diagram	Section 1.1
General Description	Section 2.0
Assembling and Wiring the Intelliscan Eighteen-Zone	Section 3.0
Site Selection	Section 4.0
Using the Intelliscan Eighteen-Zone	Section 5.0
Keypad layout	Section 6.0
Visual Display Panel	Section 7.0
Adjusting Operating Parameters	Section 8.0
Using Keypad and L.C.D. Display	Section 9.0
Main menu Selections	Section 10.0
Program Settings	Section 10.1
Menu Definitions	Section 10.2
O.T.P. Security Level	Section 10.3
Suggested Parameters for O.T.P. Security Level	Section 10.4
F.A.A Three Gun test Security Level	Section 10.5
Suggested Parameters for Three Gun Security Level	Section 10.6
Higher Security Weapons Detection	Section 10.7
Suggested Parameters for Higher Security Weapons	Section 10.8
Industrial Applications	Section 11.0
Eliminating False Alarms	Section 12.0
Operating Multiple Detectors in Parallel	Section 13.0
Achieving Uniform Detection	Section 14.0
Support Floors with Excessive Structural Metal	Section 15.0
Horizontal Axis Gain Control	Section 16.0
Need For Detection Enhancement	Section 17.0
Maintenance and Repair	Section 18.0
Warranty	Section 19.0

IMPORTANT:

If you have received a consignment of more than one detector please insure that the Side Panels are matched to the correct Header Assembly. Serial numbers are written on the packing cases and on identification labels attached to top Side Panels and Header.

For information on general metal detection techniques and operating procedures please refer to our web site at; www.rangersecurity.com (see "Understanding Basic Metal Detection Listed on Information page.

1.0. INTELLISCAN EIGHTEEN-ZONE SPECIFICATION

Dimensions:

Archway inside-	30 Inches Wide	80 Inches High	20 Inches Deep
Overall outside-	35 Inches Wide	87 Inches High	20 Inches Deep

Regulatory Standards:
The Intelliscan Eighteen-Zone is certified by the U.S. Federal Aviation Administration, and meets or exceeds all requirements of the National Institute of Law Enforcement and Criminal Justice (N.I.L.E.C.J.) standard 0601.00 security levels 1-5.

Electronics and Electromagnetic:
The Intelliscan Eighteen-Zone is processor based and features true multiple-zone performance. The archway passage consists of eighteen separate zones. It combines unique multiple independent sensors with high speed digital processing. A built in display panel provides instant visual identification of the exact location of a suspected weapon, or weapons, in the archway area.

Detection Programs.
The Intelliscan Eighteen-Zone has 20 detection programs. They have been designed for both weapon screening and asset protection applications. The weapon screening applications are designed for various threat levels and provide good detection of ferrous and non-ferrous metals.

Header Assembly, Control Panel and Display
The Control Panel at the front of the Header Assembly contains an on/off Key switch, a built in Alarm Display Panel, an L.C.D. Display Panel that shows system operating parameters, and Keypad for operating parameter data entry. The built in Alarm Display Panel depicts the area within the archway opening. It has an L.E.D. array showing the eighteen separate detection zones. A twelve-segment bargraph display shows an object's signal strength in real-time. Also included are red *Alarm* events L.E.D. a green *Ready* L.E.D. and yellow *Wait* L.E.D. all electronics are housed in the Header Assembly.

System Throughput:
The Intelliscan Eighteen-Zone accommodates a wide range of walk-through transit speeds. Rapid automatic reset maximizes the system throughput rate to over ***fifty passes per minute***. Intelliscan's speed range provides consistent detection over a wide range of object transit speeds.

Interference immunity:
Intelliscan Eighteen-Zone advanced design provides excellent interference rejection. Outside interference from sources such as computers, fluorescent lights, etc., have minimal impact, enabling the unit to operate in environments that render many units inoperable.

Uniform Detection:
The field of detection is uniform from top-to-bottom with no hot spots or dead spots. In situations where large amounts of steel re-bar exist in a support floor and cause a drop in detection at ankle height: adjusting the sensitivity of the floor level zone can compensate the loss. Normal operation can be achieved even when excessive amounts of metals are present. The sensitivity of the six horizontals zones can be adjusted independently. They allow uniform detection to be maintained in all regions of the detector. Horizontal Axis Gain Control compensates for detection losses caused by external metal in walls or furniture. It adjusts the sensitivity horizontally across each zone.

Multiple Operating Frequencies:
The Intelliscan Eighteen-Zone provides *nine user selectable operation frequencies* allowing simultaneous operation of multiple units without interconnecting slaving cables.

Memory:
The Intelliscan Eighteen-Zone utilizes an embedded microprocessor. Whenever adjustments are made to the operating parameters they are automatically retained in memory. When the detector is powered down the previously entered operating parameters are retained in memory.

System Security:
Intelliscan Eighteen-Zone is pass-code protected and has a locking key switch that connects the AC power. A six digit pass code must be entered before operating parameters can be changed.

Construction:
The Intelliscan Eighteen-Zone is coated in a durable resistant Formica finish. The Side Panels and Header Assembly are sturdily constructed for stability and durability.

System Diagnostics:
The Intelliscan Eighteen-Zone has self-diagnostics test routines. When the unit is powered up it automatically self-test and calibrates itself to the surrounding environment. Periodic calibration is not needed.

Electrical:
The Intelliscan Eighteen-Zone's Universal Power Supply operates off voltages in the range 115-230VAC / 47 to 63Hz.

Operating Environment:
Indoor operation from 0C to +55C. Humidity to 95% non-condensing

Weight:
140lbs (63.6 Kg)

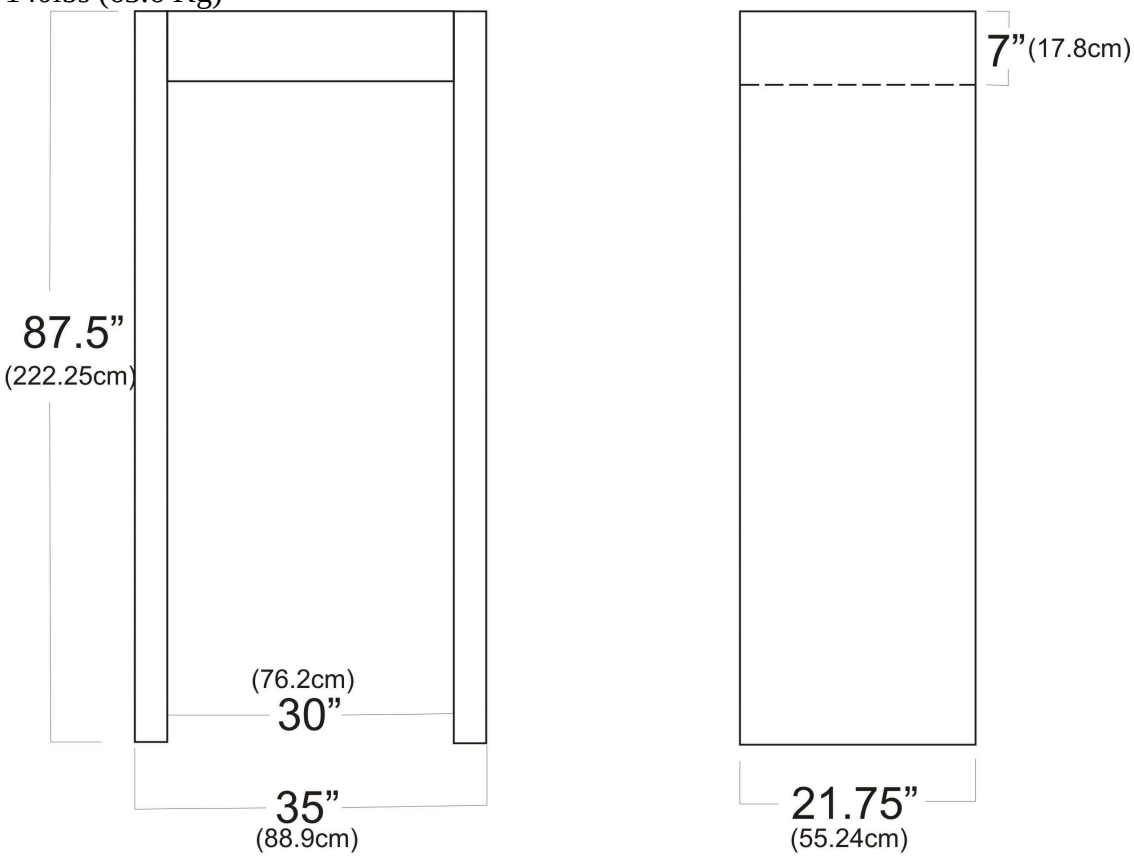

Warranty:
A two year limited warranty.

Weight: 140lb. (63.6kg.)

1.1 PARTS LIST AND DIAGRAM

Parts List:

1. Header (Electronics enclosure)
2. Side Panel A
3. Side Panel B
4. (8) Flat Washers
5. (8) 2 ½ Socket Head
6. (8) 5/8” Plugs
7. Ten Foot Power Cord

Parts Diagram:

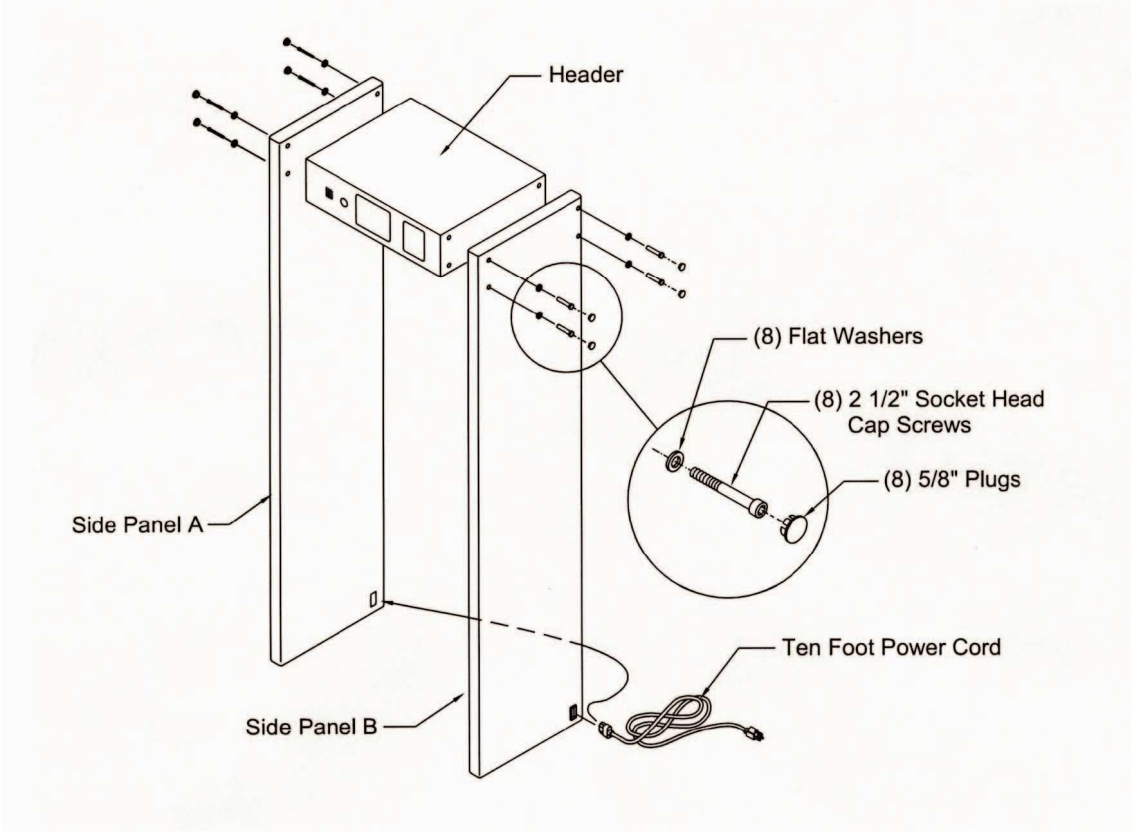

2.0GENERAL DESCRIPTION OF INTELLISCAN EIGHTEEN-ZONE

The Ranger Intelliscan Eighteen-Zone uses a unique Continuous Wave Multiple Sensor Technique. An embedded processor analyzes data from multiple individual sensors. An Alarm Display Panel depicts the archway opening, showing eighteen separate detection zones within the opening. The eighteen zones are monitored individually and typically, when used for weapon screening, detect a metal mass the size of a weapon before alarming. This substantially negates the problem of small amount of harmless metal, such as key and coins, causing an unwanted alarm. Security personnel can pinpoint the exact location within the archway where a weapon-sized object is being carried. If more than one weapon is carried the location of each is displayed.

The ground zone can be used to accurately compensate for signal losses caused by structural metal in a support floor. This independent adjustment eliminates the need to increase the overall sensitivity of the detector. In contrast, when a conventional detector is operated on a support floor containing re-bar its overall sensitivity must be raised to a level where detection occurs at floor level. This overall increase in sensitivity causes the upper region of the detector to become overly sensitive and unwanted alarms occur. Intelliscan's fully adjustable floor control enables uniform detection to be achieved throughout the detector as the upper zone can be operated independently at normal sensitivity levels. Intelliscan Eighteen-Zone's Multiple Zone Detection increases the throughput rate of people being screened. A decrease in unwanted alarms from harmless personal metal objects; coupled with the ability to identify the location of weapon sized objects both increase screening efficiency. Traffic flows faster and more smoothly because of the lower incidence of unwanted alarms. Also, when an alarm does occur the guard can immediately target the suspect object. Screening speed, accuracy, and quality of security are all enhanced.

The Intelliscan Eighteen-Zone uses self-diagnostics that monitor electronics; environmental, interference and metal overload conditions. The alarm Display Panel includes a twelve-segment signal strength bar graph that provides an indication of sized object and strength of external interference.

Intelliscan eliminates common detector problems such as false alarms, uneven detection, and inconsistent operation. The super performance of the Intelliscan Eighteen-Zone benefits everyone – security personnel have a lower workload, the public suffer less delays the purchaser enjoys higher quality surveillance.

***NOTE: it is imperative**
That the serial numbers on the header
& side panels A & B all match,
As each unit is calibrated with
the specific matching set of side panels
And headers and mix-matching
them may cause Dead spots
(non-detecting spots) or erratic operation.

The two packing cases contain two Side Panels, a Header Assembly, eight Allen bolts with washers and a wrench, two keys and a power cord. The Side Panels have identification labels screwed onto their top

Surface Panel "A" is positioned on the left of the Header Assembly. Lay the two side panels with their silver connector sockets facing upwards. Ideally, assemble the unit close to the location where it to be used. The Header Assembly should be placed between the side panels.

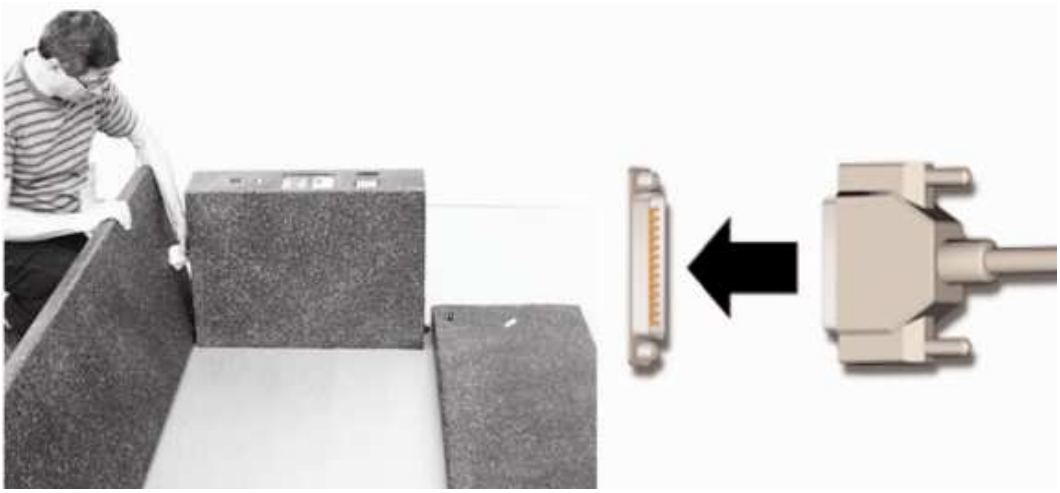

And with its Control Panel facing upward. Turn Side Panel "A", trough 90 degrees so the top socket is facing the Header Assembly, see Figure 2. Align the top of the Side Panel with the top of the Header Assembly and insert the Header Assembly interconnection cable firmly into the Side Panel Socket. Tighten the connector's securing screws. Next, insert the four Allen Bolts, with washers, into Side Panel and start screwing them into the Header Assembly. *Do not tighten the bolts at this stage.* Repeat the above exercise with Side Panel "B". In addition to the Side Panel interconnection cable there is a power cord. Both connectors should be firmly seated in the Side Panel sockets. Again, secure the Side Panel to the Header Assembly. When all eight bolts are engaged start tightening them so that the Side Panels are firmly secured to the Header Assembly.

Please Note: when the unit leaves the factory the power cord is configure to connect to Side Panel "B", see Figure 3. if the wall AC power outlet is situated adjacent to Side Panel "A", it is necessary to re-route the Header Assembly power cord. First, Remove the Header Assembly's top access panel. The black power cord should be moved from the right-hand to the left-hand bulkhead compartment and inserted into Side Panel A's power socket. Figure 4 refers.

One the Side Panel have been secured, raise the unit to the upright position and connect the power cord into the outer surface of the appropriate Side Panel. Again, check bolts re tight.

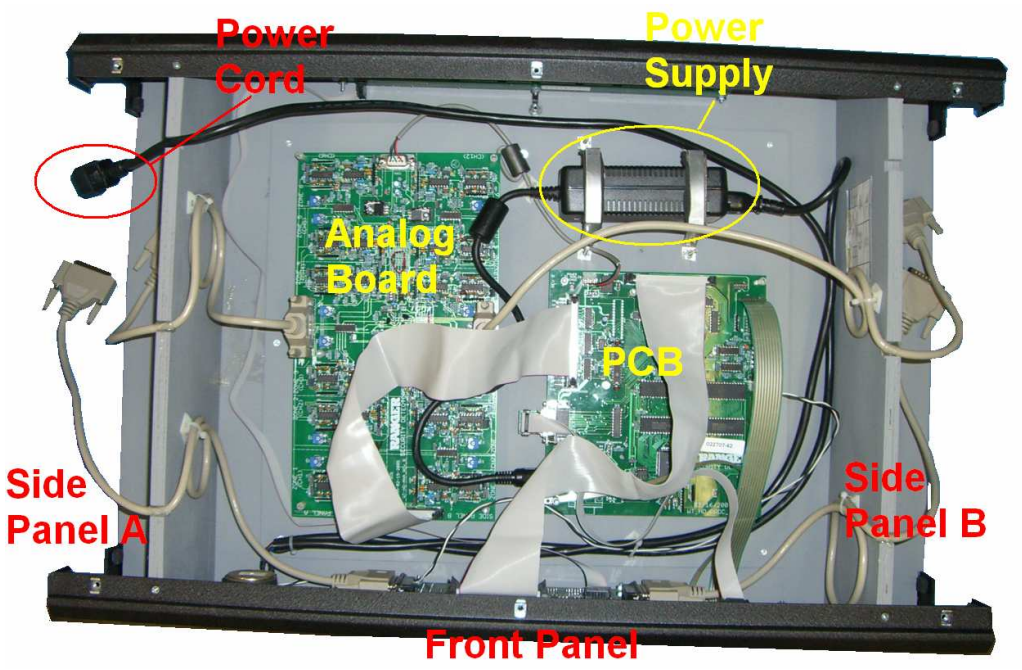

4.0. SITE SELECTION

CHOOSE YOUR INATALLATION CAREFULLY! The Intelliscan Eighteen Zone should be installed on a level, solid floor. There should be no large metal objects within 3 feet of the unit. Intelliscan is designed to detect metal that is moving, hence, closely spaced large metal objects such metal clad doors, passing metal carts or fork lifts, etc. **will cause** an alarm event. Choose your installation site carefully to minimize disturbances from large moving metal objects in the surrounding area. Likewise, **care should be taken not to position the unit too close to walls which contain rebar construction or conduit.** *If the unit must be used near stationary metal the Horizontal Axis Gain Control feature can be used to compensate for signal losses*. Use a Model 1000 Hand scanner to scan walls for the presence of substantial amount of metal.

Plan screening area with enough room to accommodate people waiting to pass through the unit, space for operators, and a non-metallic table for depositing objects removed from pockets and area for hand scanning. Make sure the unit will not get exposed to rain, mist or condensation. Insure the power cord is routed away from pedestrian traffic.

5.0. USING THE INTELLISCAN EIGHTEEN ZONE

Intelliscan has Alarm Display Panel with an L.E.D. array, an L.C.D. alpha-numeric display and a 20 button Keypad. The L.C.D. display and keypad allow the user to adjust operating parameters and to tailor the unit's operation to meet his/her specific security requirements. The Alarm Display provides information on alarm events, signal strength, and abnormal conditions such as high noise and / or metal overload conditions.

Turn the unit on by inserting the key into the Key switch and turning it clockwise. All the L.E.D. elements light up in sequence one at a time. The L.C.D. Panel displays a SELF-TEST message while a self-diagnostic test is in progress. Next it reads CALIBRATION. During this period the unit calibrates itself to its surrounding environment (**always keep moving metal objects and people clear of the unit when it is undergoing calibration.)** If any disturbance to the surrounding environment occurs during SELF-TEST or CALIBRATION (e.g. a metal cart is moved by the unit, person touches the unit, person walks through it, etc.) the unit must be returned to SELF-TEST mode. To reset, press the "**Rst"** (Reset) key on the Keypad. Alternative, turn the AC power off and then back on; it then automatically self-test and recalibrates.

When the unit has completed testing and calibrating the L.C.D. continuously scrolls and shows: program, volume and version number. Intelliscan performs all normal screening operations in this operating mode. Adjustments to the operating parameters settings cannot be made in this program mode; for example, sensitivity values cannot be accessed. Security screening should always be performed in this mode.

Operating parameters can only be accessed by an authorized person. Entry into the operating menu is gained by entering a six-digit pass-code via the keypad. If, after accessing the menu no keypad changes are made within a five minute period, access to the operating parameters is automatically terminated. The default pass-code key strokes are ***1, 2, 3, 4, 5, 6*** and ***Ent*** (Enter).

6.0 KEYPAD LAYOUT

Select (M↑)	Tabs down though the menu in forward direction
Select reverse (M↓)	Tabs through the menu in reverse direction
Backspace (Bks)	Deletes what has been typed; allows for corrections.
Nominal (Nom)	Resets the settings to the nominal operating parameters (original operating values set at the factory)
Escape (Esc)	Escapes from the scrolling menu program and back to the normal operating mode
Reset (Rst)	Recalibrates the unit.
Negative (-)	adds a negative value to a number (e.g. used to lower zone sensitivity settings).
Increment and Decrement (Inc) (Dec)	used to adjust single digits settings. (Inc). For up and (Dec) .for down.
Enter (Ent)	To enter a parameter value.
Numerals.	0. through 9.

VISUAL DISPLAY PANEL

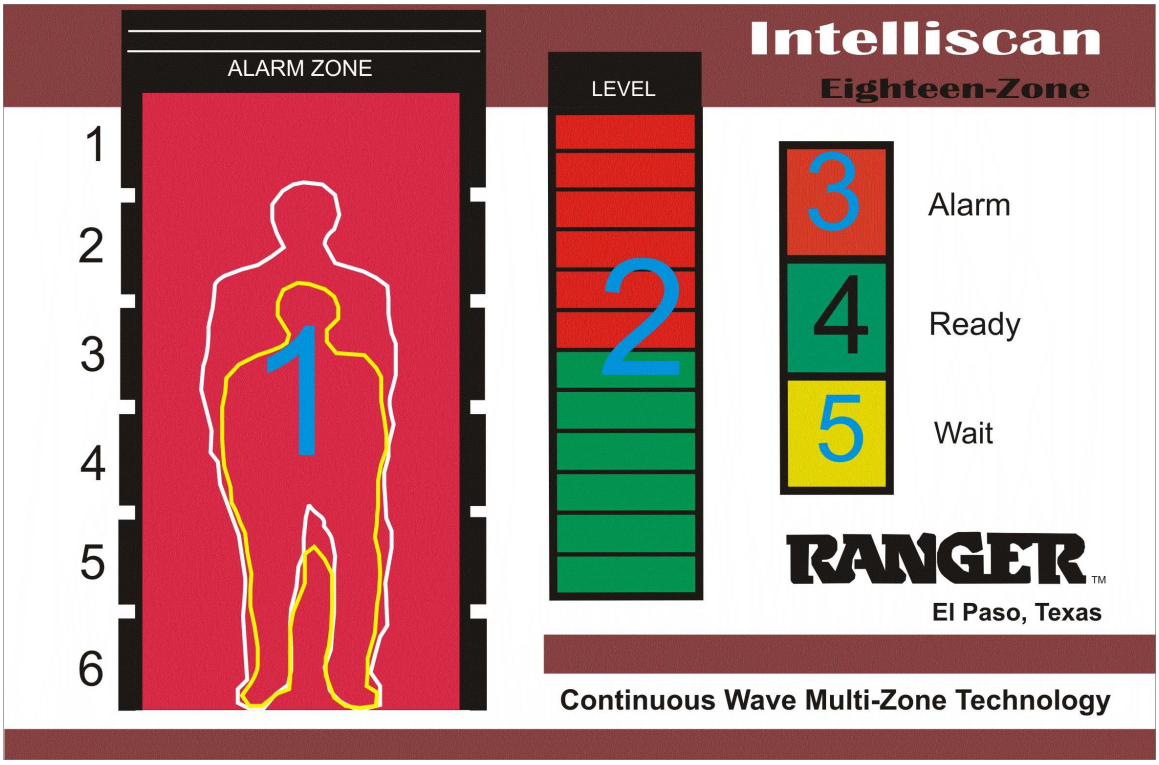

1. Archways depiction – shows the location of weapons or target metal objects within the eighteen Zone detection model. When an alarm event occurs an L.E.D, illuminates and depicts the exact position of the object.

2. Twelve segment real-time signal strength bargraph – shows signal strength of objects that pass through the archway. Signal level rises as metal is inserted. If the signal level rises into the red area the unit alarms. Number of bars that are illuminated is proportional to object size.

3. Alarm indicator light (red L.E.D) – lights and is accompanied by an audio alarm when a weapon or contraband size object is detected.

4. Ready indicator light (green L.E.D) illuminates when unit automatically resets and is ready to screen next person.

5. Wait indicator light (yellow L.E.D.) lights when unit is self calibrating discriminating an object or goes into noise or metal overload fault condition.

8.0. ADJUSTING OPERATING PARAMETERS

All adjustments to the operating parameters are entered via the Keypad and viewed on the L.C.D. Display panel. A pass-code is needed to access the program prior to making parameter changes.

All operating parameters in menu have a preset value (nominal value). The nominal is a pre-set factory adjustment and should only be considered as a starting point.

9.0. USING THE KEYPAD AND L.C.D DISPLAY

L.C.D. Display shows version number, program, volume level and sensitivity level

Press keys **123456** an **Ent.**	After entering pass-code, select (M↑) or (M↓) to scroll thru menu**. *M to select*** appears on the L.C.D. menu.
Push (M↓) select	PGL Threat Aviation current 1 new * appears on the L.C.D. Any of the 20 programs can be selected. (See: section on program settings)
Push (M↓) select	Baseline sensitivity current 50% new * appears on the L.C.D. Select new sensitivity.
Push (M↓) select	Alarm tone 1-3 current 2 new * appears on the L.C.D. select new tone.
Push (M↓) select	Alarm Volume 0-7 current 4 new * appears on the L.C.D. select new volume.
Push (M↓) select	Alarm hold 1-99 current 1 new * appears on the L.C.D. select new, this selects the time the alarm zone light stays on.

10.0. Main Menu Selections

Program – Sets the desired program. Programs 1 -12 factory set values, 21 – 24 users defined.
Baseline Sensitivity – Sets 6 horizontal zones to same baseline setting.
Alarm Tone – Sets the frequency of the audio alarm.
Alarm Volume – Sets the volume level of the alarm tone.
Alarm Hold Time – Sets the time duration of the LED indication of the alarm.
IR Sensor – Enables/Disables the intelligent IR Sensor.
Target Filter – Sets Low frequency filter values (0-8).
Skew Frequency – Sets the unit frequency (1-8).
Wide Mode – Sets unit for 36 inch wide unit.
Zone Settings – Sets gain in each of 6 horizontal zones.
IDC Parameters – Displays discrimination values of individual targets.
HAGC Settings – Allows user to access Horizontal Control.

10.1. <u>Program Settings</u> – This allows selections of programs 1- 24 as defined below:

Program 1 - Low threat Aviation
Program 2 – Medium threat Aviation
Program 3 – High threat Aviation

Program 4- Low threat Federal Buildings
Program 5 – Medium threat Federal Buildings
Program 6 – High threat Federal Buildings

Program 7 – low threat prisons
Program 8 – Medium threat prisons
Program 9 – High threat prisons

Program 10 – Low threat Public Areas
Program 11 – Medium threat Public Areas
Program 12 – High threat Public Areas

Program 13 – all metal no boost
Program 14 – all metal low boost
Program 15 – all metal medium boost
Program 16 – all metal high boost

Program 17 – Suppress positive values for IDC
Program 18 – Suppress negative values for IDC

Program 19 – Copper
Program 20 – Aluminum

Program 21 – User definable
Program 22 – User definable
Program 23 – User definable
Program 24 – User definable

10.2. Menu Definitions

Baseline Sensitivity – Sets unit sensitivity range between 1 (minimum) and 99 (highest)

Alarm Tone – Sets the frequency of the alarm to 500,100 or 1500 hertz.

Alarm Volume – Sets the volume of the alarm in steps between 0 and 7.

Alarm hold Time – Sets the time the LED alarm indication is on after an alarm. This value is between approximately 1 second and 99 seconds. This function is disabled if the IR Sensor is set to 1.Or on.

IR Sensor – Enables or disables the intelligent sensor. This activates the unit for a short time while the person is passing through the detector. If your installation is near an elevator, moving door, or large moving objects, which trigger the unit, you may want to consider this approach. "This function only works with unit equip with a sensor.

Target Filter – Sets the amount of low frequency filtering needed to reduce noise in the target spectrum.

Skew Frequency – Sets the unit in different frequencies in order to work with multiple units.

Wide mode – Enables or disables the wide mode of operation. This is use on detectors with wider than the normal 30 inches distance between side panels.

Zone Settings – Sets the amplification/ attenuation of the 6 horizontal zones. This is the same as the IDC values, 1 to 99 is amplification, and -1 to -99 is attenuation.

IDC Controls – This is a feature to help the customer, which has a need to build their own program to detect, or not detect, a particular object. Each object, when passed though the detector, shows positive and negative numbers. This is due to the signals going positive and negative. Ferrous and Non Ferrous materials will go in opposite directions when passed to the middle of the detector. Programs 17 and 18 are to enable only one reading on the display to enable the user to set values they want to enhance or reduce. Each program can have up to 7 "windows", each being a different target if so desired. Each window has a center value, a window with value, and an amplifier/attenuator value. When the object is passed to the center, the display will show side A, side B. Smaller object may have to be passed closer to one side, therefore making the farthest side reading somewhat unstable. This is normal and not to be concerned. Using the number of the closest panel, this is the IDC center value. Make 5 or 6 passes with the object in different orientations and record the values. Subtract the lower from the higher value and add 5 counts. This should be close to the needed window value. If you want to alarm on this target the AMPLITUDE value will be a positive number between 1 and 99. To attenuate the object the number will be between -1 and -99. Be careful about killing targets entirely!!! If you desire you can pick a program, which is close to the setting you need and view the settings, then change the settings and save the program as one of the user programs.

HAGC settings – Horizontal Amplification Gain Control is for setting gain on each coil independently. There are 12 coils, 6 per side locate in 6 zones. C1-C12 allows setting the amplification/attenuation of each coil with the same 1 to 99, -1 to-99 values. This is to compensate for nearby objects, which only affects some areas of the detector.

10.3. O.T.P. Security Level

The Operation Test Piece (O.T.P.) simulates the detection response from a small revolver, and is manufactured to the specifications of the U.S. Federal Aviation Administration. The O.T.P. should be carried with its barrel down and butt to the right. The O.T.P. must be detected 100% of the time as the person walks though the unit. This security level is average, and is considered adequate by many security managers for general public weapon screening Suggested settings are shown below.

10.4. SUGGESTED PARAMETERS FOR O.T.P. SECURITY LEVEL

Program	(PROGRAM=)	1	
Baseline Sensitivity	(SENS=)		20 to35%

A small adjustment to baseline sensitivity may be required because of location variables. If support floor contains re-bar, Zone 6 sensitivity will have to be increased to a level where O.T.P. is detected at ankle level. Refer to Section 14 to 16.

The FAA Operational Test Piece may be purchased from:

Larry Copello, Inc.
1239 Rollins Rd.
Burlingame, CA 94010
Tel (415)579-0256
Fax (415)579-0257

10.5. F.A.A. THREE GUN TEST SECURITY LEVEL

The U.S. Federal Administration three gun test uses three different small handguns of varying characteristics and the O.T.P. to set detection levels. Multiple passes are made through the detector with the various weapons at ankle height, waist height, and at shoulder height (a total of 36 passes.) Information on the F.A.A. test procedure may be obtained from:

Federal Aviation Administration
800 Independence Ave. SW.
Washington, DC 20591

10.6. SUGGESTED PARAMETERS FOR THREE GUN SECURITY LEVEL

Program 1 or 2
Baseline Sensitivity 35 to 50%

10.7. HIGHER SECURITY WEAPONS DETECTION

The security level includes the detection of a variety of small handguns and most Knives.

10.8. SUGGESTED PARAMETERS FOR HIGHER SECURITY WEAPONS DETECTION

Program 3
Baseline Sensitivity 35 to 70%
As baseline sensitivity increases so does security level.

11.0. INDUSTRIAL APPLICATIONS

When people being screened wear footwear with steel protection in the toe caps; reduce zone 6 (floor Zone) sensitivity to avoid unwanted alarms.

12.0. ELIMINATING FALCE ALARMS

False alarms can be defined as alarms events that occur when no one is near the detector. These events are caused by external electromagnetic interface of a frequency comparable the operating frequency of the detector. In practice, the detector interprets the interference as a signal caused by metal.

The operating frequency can be change by changing the values of Skew Frequency. There are 8 different combinations of frequencies from 1 to 8.

13.0. OPERATING MULTIPLE DETECTORS IN PARALLEL

If multiple detectors must be operated in parallel it is necessary to operate them at different frequencies. Power-up one unit at a time. If first unit is operating in a stable fashion turn-on the second unit. If no interaction occurs turn the third unit on. If one of the units interacts change the unit frequency.
Try to maintain a physical separation of three feet (0.9 meters) or more.

14.0. ACHIEVING UNIFORM DETECTION

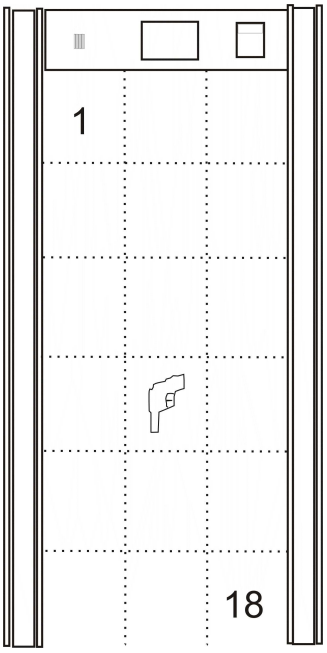

Achieving uniform detection is very important as it reduces unwanted alarms. To test uniformity use tests object such an OTP or a 2 inch steel ball bearing. If an OTP is used, hold it consistently in a barrel down butt right orientation. Pass the chosen object through the left, center and right sectors of each zone and check that consistent detection is achieved. If non-uniformity exists, adjust zone sensitivities using the following procedure:

14.1) For Zone settings go to Zone settings and press ENT. Adjust each Zone for best detection.
14.2) For individual Zone adjustments go to HAGC and select from Zone A1 to B6.
Zone A1 to A6 is the left side facing the metal detector from the front. Zones B1 to B6 is the right side panel.

15.0 SUPPORT FLOORS WITH EXCESSIVE STRUCTURAL STEEL

Excessive amounts of structural steel in floor or ceiling can rended a conventional detector inoperable. Multi-zone detector is designed to scope. This changes situation sometimes exist in building that have extra steel reinforcing to support upper level parking. Other examples are buildings that have been designed to withstand explosive blast.
If a floor contains excessive amount of metal the weapon or test object will not be detected at ground level. It may be possible to achieve detection by simply increasing the sensitivity of Zone 6 to a high positive value. Incrementally increase Zone 6 sensitivity in 5% steps and check if weapon/ test object is detected at each step.

16.0 HORIZONTAL AXIS GAIN CONTROL

Section 14 and 15 describe how zone sensitivities can be precisely adjusted to compensate for magnetic field distortions caused by structural steel in support floor. Adjust the Zone sensitivities is equivalent to applying vertical axis gain control. Similar distortions occur in the horizontal axis if the detector is positioned close to a steel support beam or furniture made from metal. The external metal causes the detection response to be increased on the side of the archway near the metal and to be decreased on the opposite.

Note ideally, the best solution is to operate the detector away from external metal object; however, not all security locations permit this.

17.0 THE NEED FOR DETECTION ENHANCEMENT

In theory, a “perfect” metal detector generates an identical detection response for all objects of the same size and shape irrespective of their metal composition. In reality, metal detectors respond differently to signal originating from objects made of different metals. The situation is further complicated when an object is made from a combination of ferrous and non-ferrous metls. Metal characteristics such as permeability, conductivity, thickness of material and heat treatment all influence the way in which metal objects interact with a detector. Detection is also affected by the shape and surface area of the object and orientation which it is carried.
From an operating perspective, the above characteristics mean that variations in metal compositions can produce some unpredictable results. For example, a small handgun may generate a much stronger detection response than a weapon that is physically much larger.

18.0 MAINTENANCE AND REPAIR

There are no user adjustable controls inside the unit. If equipment fails to perform properly contact the factory technical support department at **1-800-852-8266.** equipment repair should only be performed by a qualified trained technician.

RMA

Return Merchandise Authorization (RMA)

1. Contact Ranger Security Detectors, Inc
2. An RMA Number is required for any repair or returns.
3. RMA Number must be identified on outside of box/package.
4. Merchandise will not be accepted without an RMA.

19.0 WARRANTY

Ranger Security Detectors, Inc. warrants the Intelliscan Eighteen-Zone against defects in workmanship or materials, under normal use, for a 2 year period from the date of purchase to the original user. Liability in all events is limited to the purchase price paid. Liability under the aforesaid to Ranger Security Detectors El Paso factory. Ranger Security Detectors, Inc. Warrants the Intelliscan Eighteen-Zone against defects in workmanship.

Ranger Security Detectors, Inc.
11900 Montana Avenue
El Paso, Texas 79936
Website: www.rangersecurity.com
E-mail: support@rangersecurity.com

Telephone Number: (915) 590-4441
Toll Free Number: (800) 852-8266
Fax Number: (915) 592-1043